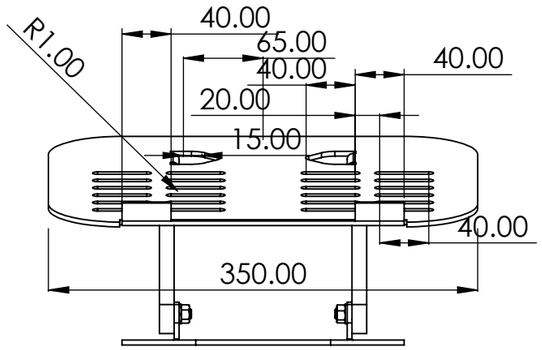

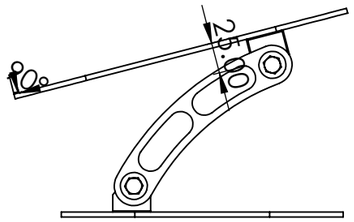

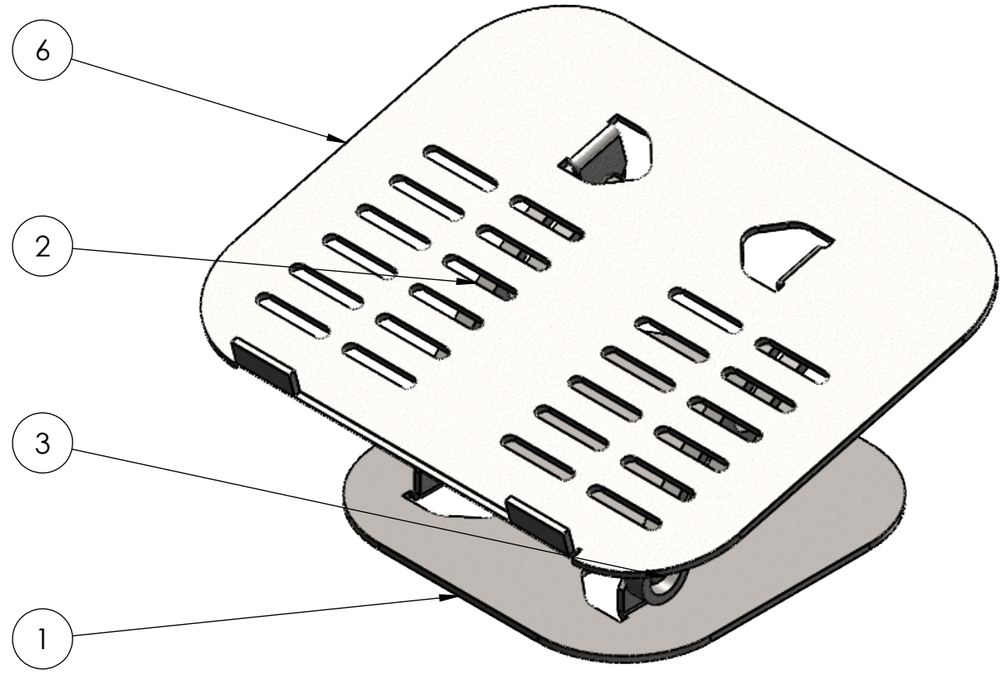

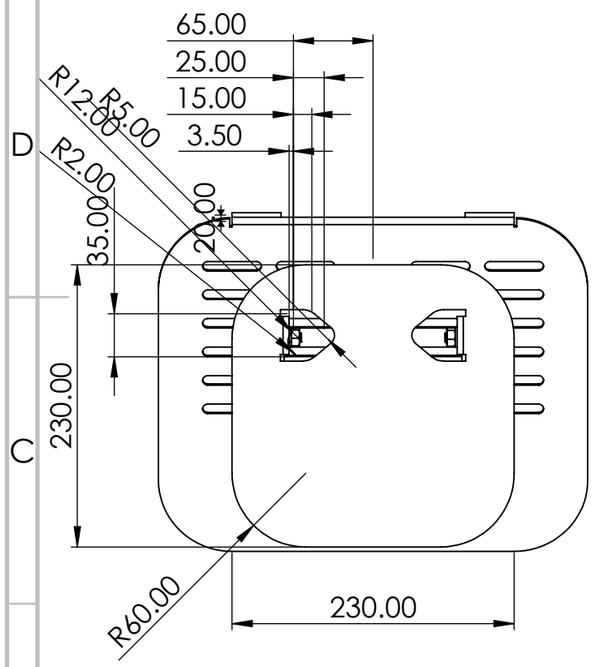

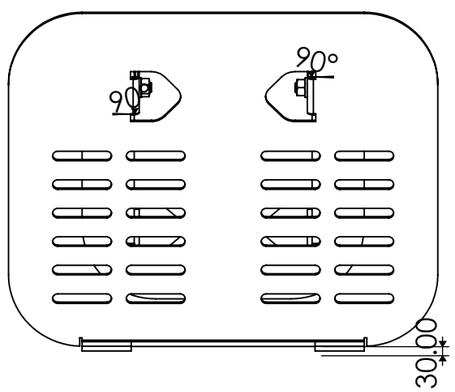

ITEM NO.	PART NUMBER	QTY.
1	flat bottom plate	1
2	Part1 connecting rod	2
3	ISO 4017 - M8 x 16-N	4
4	Washer ISO 7089 - 8	4
5	ISO - 4032 - M8 - D - N	4
6	Part2 top holder	1

UNLESS OTHERWISE SPECIFIED:
DIMENSIONS ARE IN MILLIMETERS
SURFACE FINISH:
TOLERANCES:
LINEAR:
ANGULAR:

FINISH:

DEBURR AND BREAK SHARP EDGES

DO NOT SCALE DRAWING

REVISION

	NAME	SIGNATURE	DATE
DRAWN			
CHK'D			
APPV'D			
MFG			
Q.A			

TITLE:

MATERIAL:

WEIGHT:

DWG NO.

Foldable Laptop

A3

SCALE:1:5

SHEET 1 OF 1

SOLIDWORKS Educational Product. For Instructional Use Only.